4001
Wheel Dumpers



The four-wheel pro

Shifts up to 4,000 kg payload quickly and efficiently and then dumps the load with the spot on precision of the standard swivel-tipping skip. Guaranteed to get things going on the building site.

- Low maintenance hydrostatic four-wheel drive;
- swivel tipping skip (standard), large-volume, robust and hard-wearing skip design; standard skip capacity of up to 2,550 l (heaped).
- With high ground clearance and a top speed of 21 km/h transport jobs get done fast.
- Maximum payload 4,000 kg
- More of a speedster: the 4001s Speed Version gets up to 25 km/h!

4001 Technical specifications

Operating data	
Payload	4,000 kg
Shipping weight	2,730 kg
Skip capacity level	1,650 l
Skip capacity heaped	2,130 l
Skip capacity water level	1,030 l
Engine / Motor	
Engine / Motor manufacturer	Yanmar
Engine / Motor type	4TNV88
Engine / Motor	Diesel
Engine performance acc. to ISO 3046/1	34.1 kW
Emission standards stage	3a
Displacement	2,189 cm^3
Engine RPM	2800 rpm
Travel speed	21 km/h
Articulation angle	37 °
Pendulum angle	15 °
Turning radius	3,730 mm
Gradeability	50 %
L x W x H	4200 x 1795 x 2700 mm
Flow rate	46.5 l/min
Operating pressure	175 bar
Tank capacity	38.9 l
Sound level (LwA)	101.4 dB(A)

4001 Dimensions

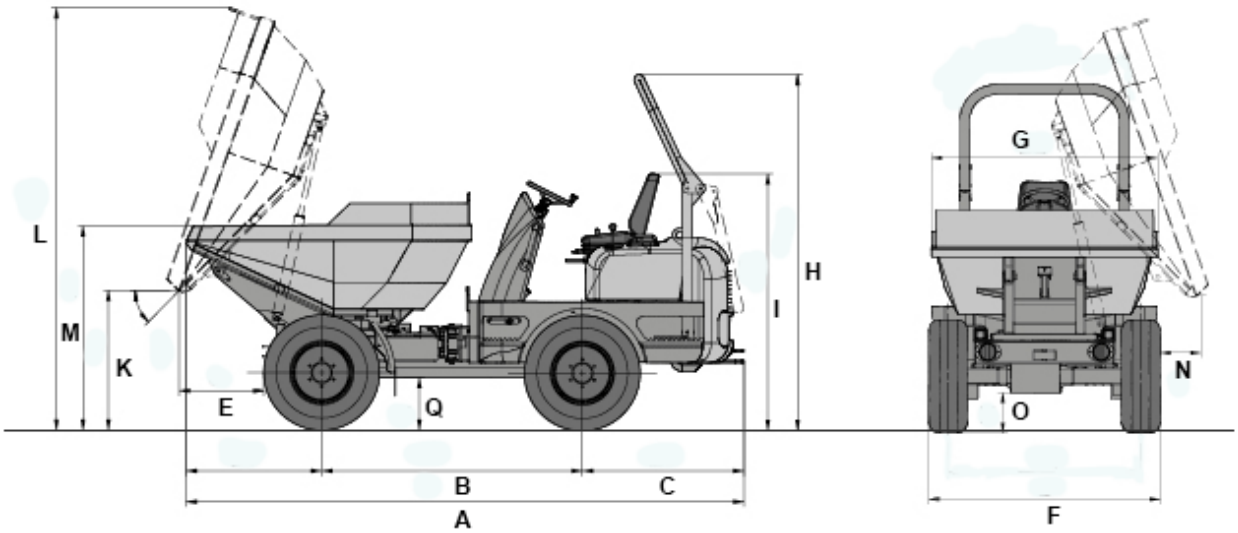

A	Overall length	4,200 mm
B	Wheelbase	1,960 mm
C	Rear overhang	1,215 mm
E	Dumping distance	600 mm
F	Width vehicle	1,795 mm
G	Skip width	1,740 mm
H	Height ROPS	2,700 mm
I	Height ROPS tipped	1,930 mm
K	Dump height max.	1,030 mm
L	Skip height tipped	3,200 mm
M	Skip height	1,500 mm
N	Dumping distance seitlich	270 mm
O	Ground clearance	300 mm
--	Dump angle	46 °
Q	Distance	390 mm

Please note: that product availability can vary from country to country. It is possible that information / products may not be available in your country. More detailed information on engine power can be found in the operator's manual; the stated power may vary due to specific operating conditions. Subject to alterations and errors excepted. Applicable also to illustrations.
Copyright © 2020 Wacker Neuson SE.